# JUPITER V1 ROBOT

POK
FIREFIGHTING EQUIPMENT

www.pok.fr

## Remote controlled Dprt

Ver A1

# Introduction



## Plan:

1) Identification of the material
2) Characteristics
3) Operation of the Monitor
4) Operation of the Robot

**Reference documents:**

- **MOP_ACM_02079** (Manual)
- **PLA_01169_Flyer** (Flyer)

# 1) Identification of the material

*Robot JUPITER V1*

**Global View of the Material :**

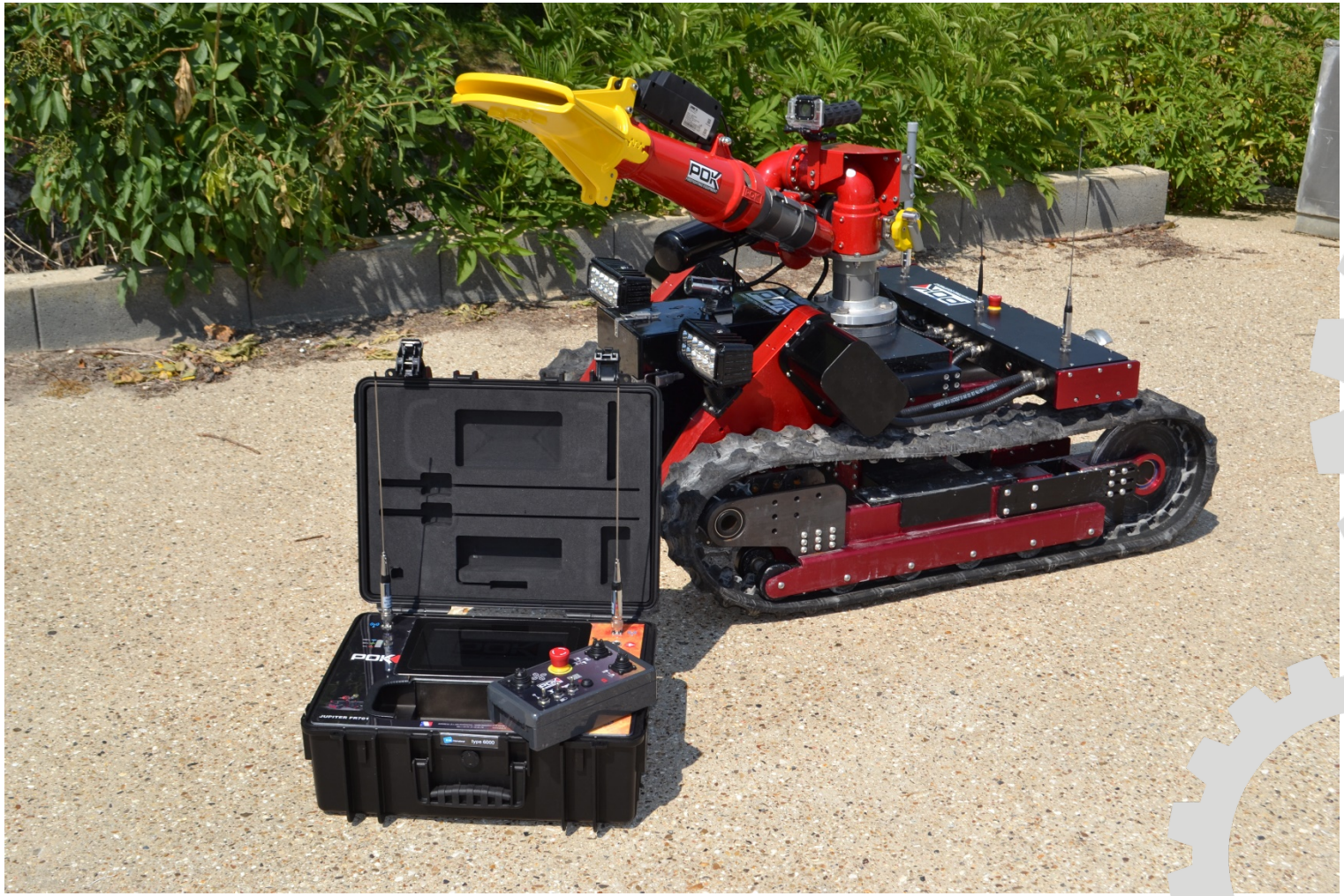

POK FIREFIGHTING EQUIPMENT

www.pok.fr

# 1) Identification of the material

*Robot JUPITER V1*

**Global view of the Material:**

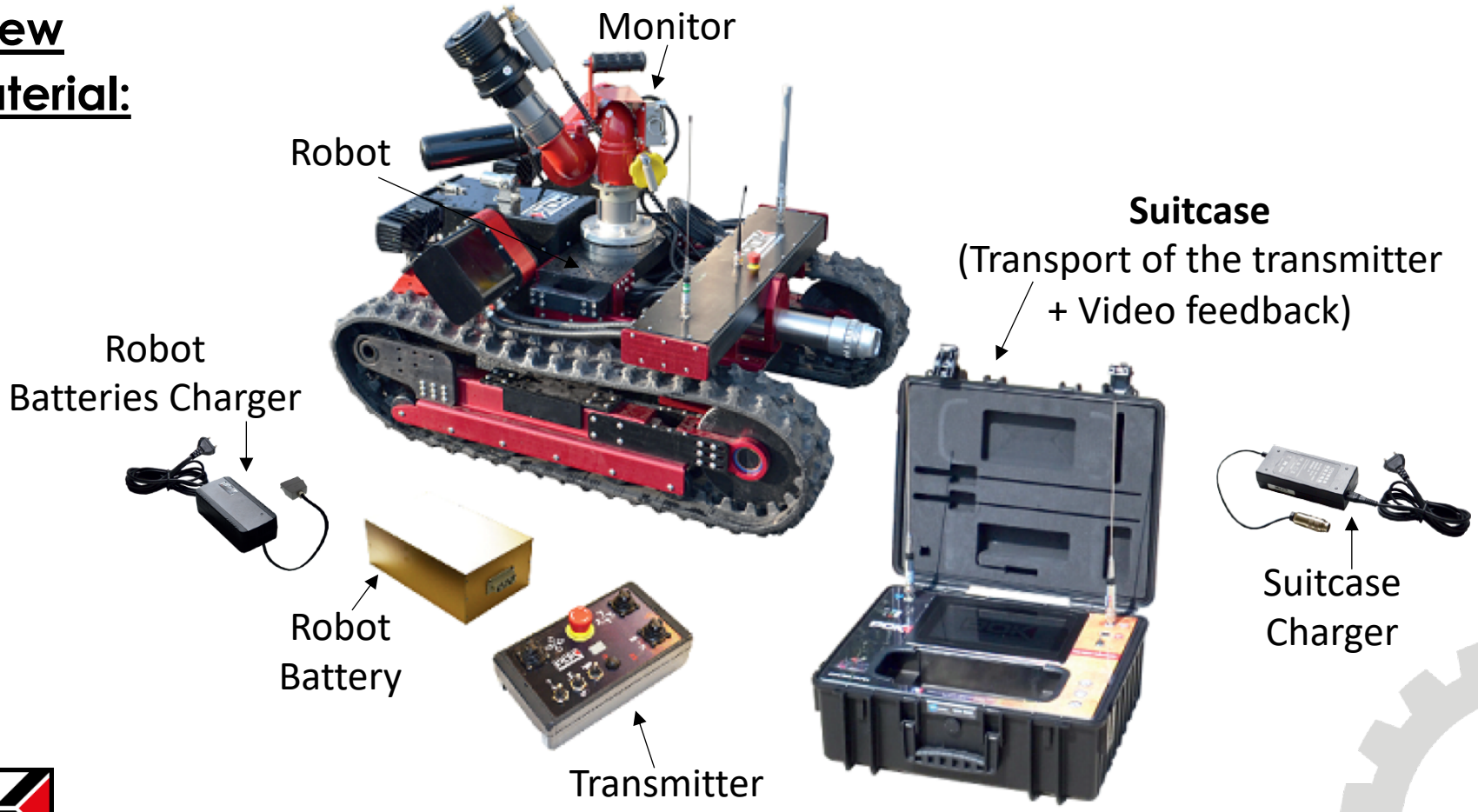


POK FIREFIGHTING EQUIPMENT
www.pok.fr

# 1) Identification of the material

*Robot JUPITER V1*

**Transmitter:**

1/ Monitor autos weep parameters
2/ Choice of the radio channel

POK FIREFIGHTING EQUIPMENT
www.pok.fr

# 2) Characteristics



**Robot Dimensions:**

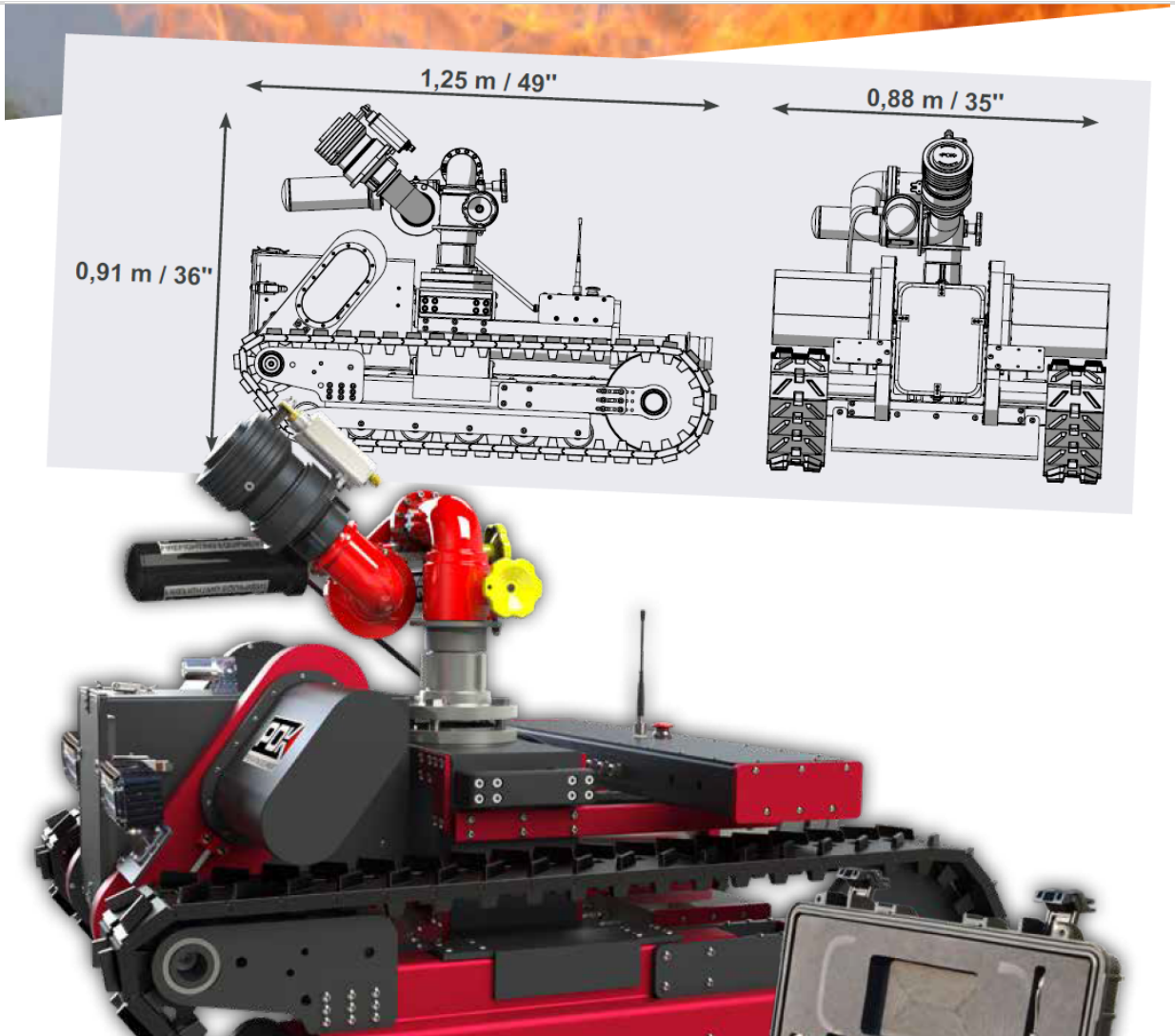


Can go through doors at the standard 93 cm

POK FIREFIGHTING EQUIPMENT
www.pok.fr

# 2) Characteristics



## Weight of the Robot:

**310 kg**

With monitor

+ extra load

260 kg empty with monitor
(Without extra load)

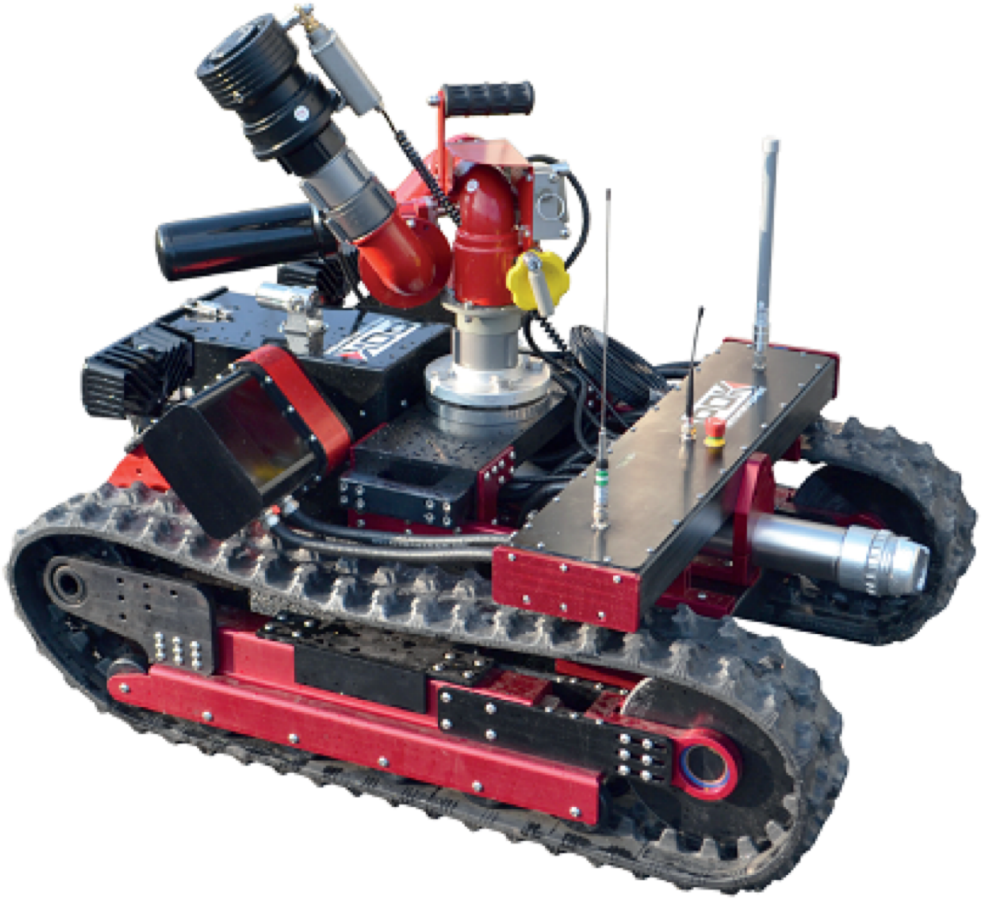

Maximum Load
340 kg

POK FIREFIGHTING EQUIPMENT
www.pok.fr

# 2) Characteristics



**Robot speed:**

**2,6 km/h**
**(minimum)**

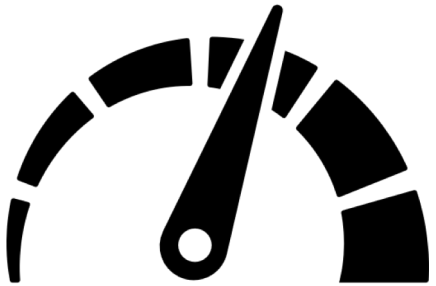

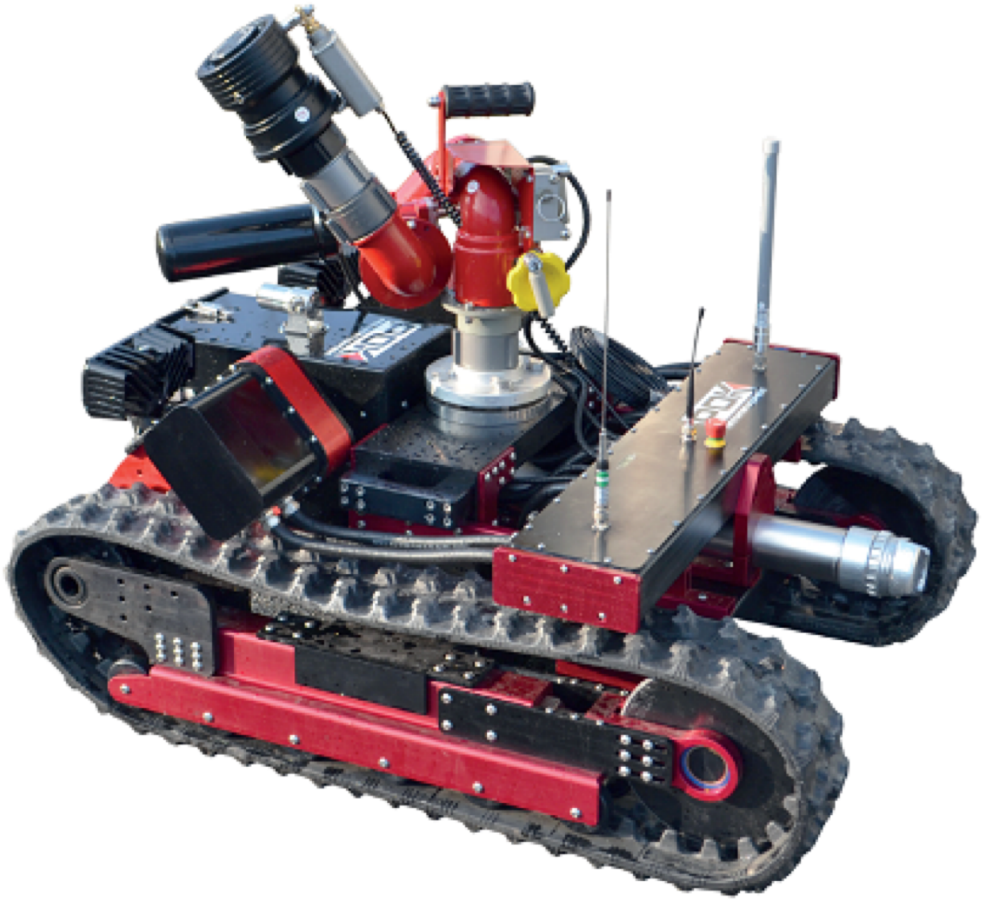

POK
FIREFIGHTING EQUIPMENT
www.pok.fr

# 2) Characteristics



**Robot autonomy:**

**2h** **(One battery)**

**4h** **(Two Batteries)**

**Load time ≈ 7 h**

**Li-ion**
**48 V**
**26,1 A.h**

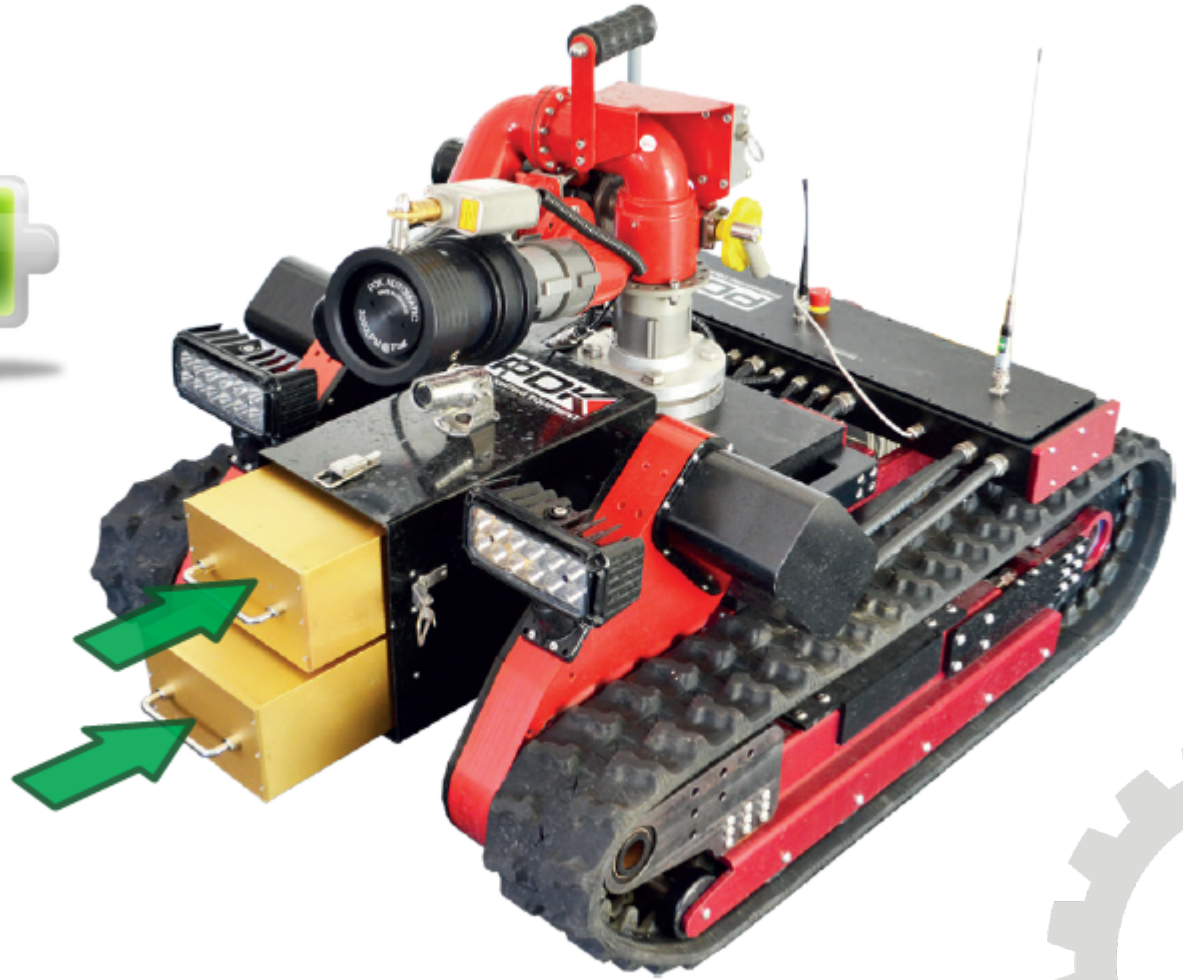

POK FIREFIGHTING EQUIPMENT

www.pok.fr

# 2) Characteristics



**Radio Range:**

**Vidéo**
**433 MHz**
**1 km**

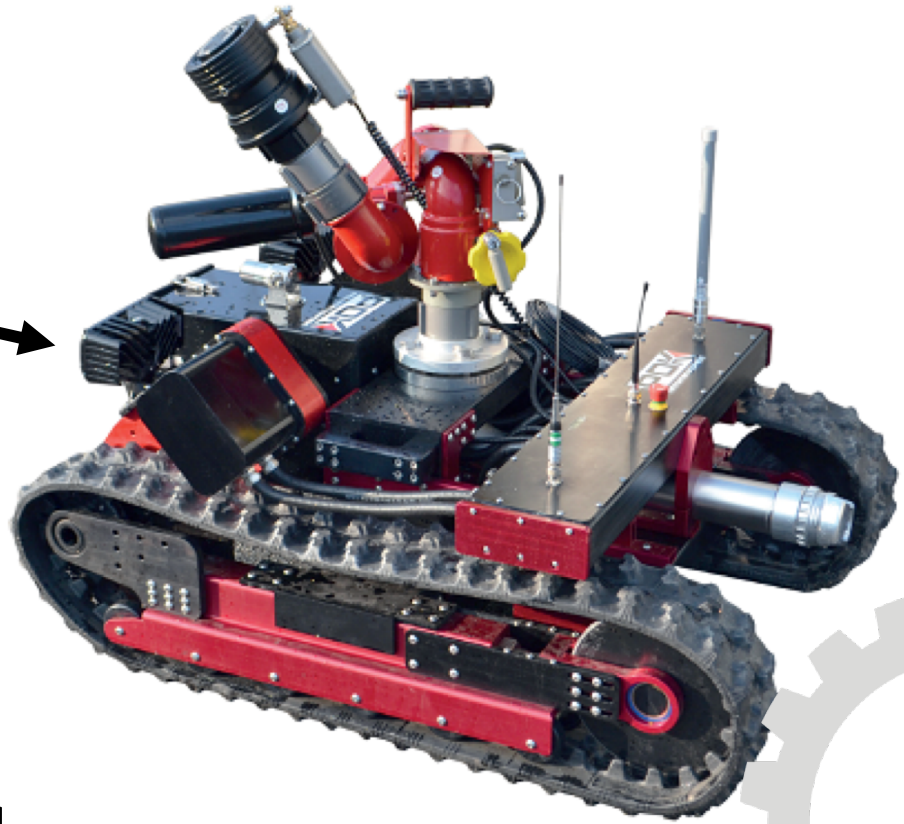

**Orders**
**2,4 GHz**
**200 m**

**In Free Field**

POK FIREFIGHTING EQUIPMENT
www.pok.fr

# 2) Characteristics



**Camera:**

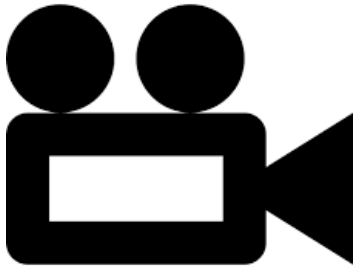

| CAMÉRA | | |
|---|---|---|
| | Type | • Caméra submersible Inox 316 L IP68 |
| | Référence | • TC009974 |
| | Submersible | • 50 m |
| | Résolution | • 976 x 582 pixels |

POK FIREFIGHTING EQUIPMENT
www.pok.fr

# 2) Characteristics



**Floodlight LED:**

**Two LED Floodlight**
**High range**
**(1500 Lumens)**

POK FIREFIGHTING EQUIPMENT
www.pok.fr

# 2) Characteristics



**Articulated Elbow:**

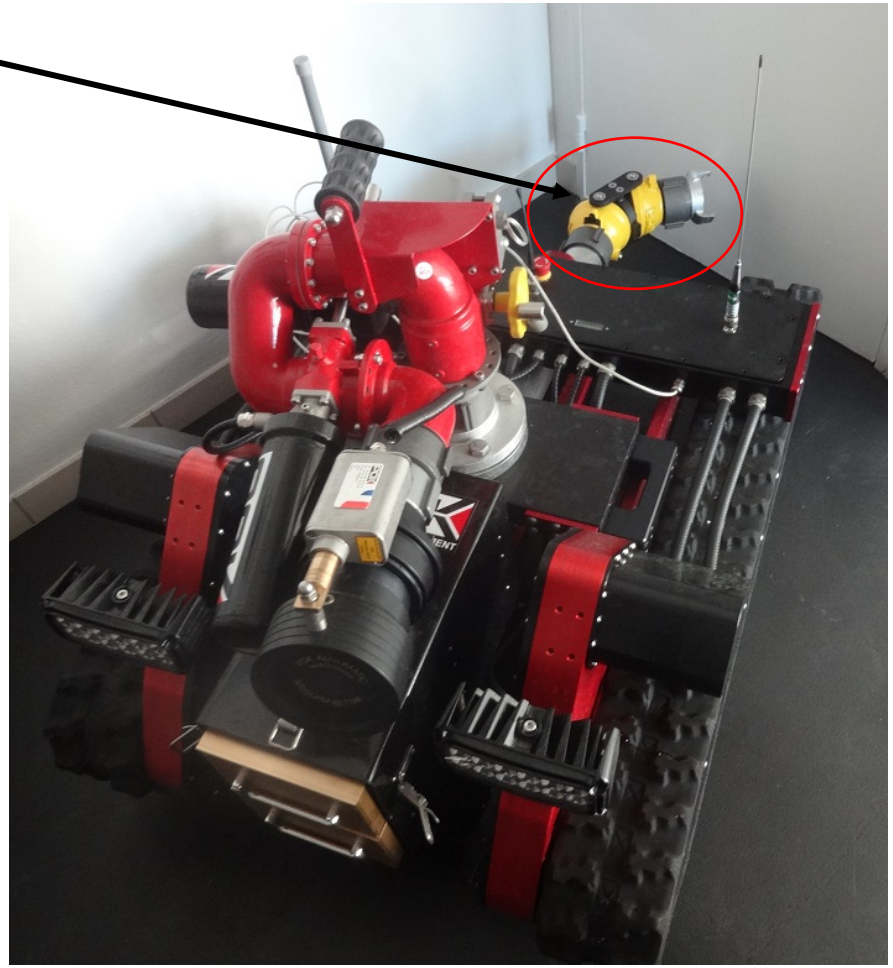

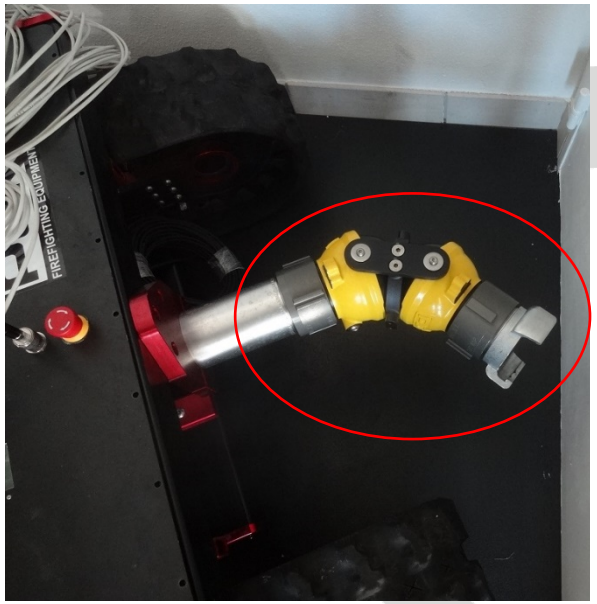

**Esay mobility with pipes**

POK FIREFIGHTING EQUIPMENT
www.pok.fr

# 2) Characteristics



**Towing capacité :**

**60 meters**

**DN70**

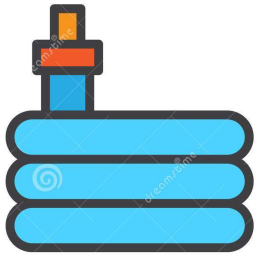

POK FIREFIGHTING EQUIPMENT

www.pok.fr

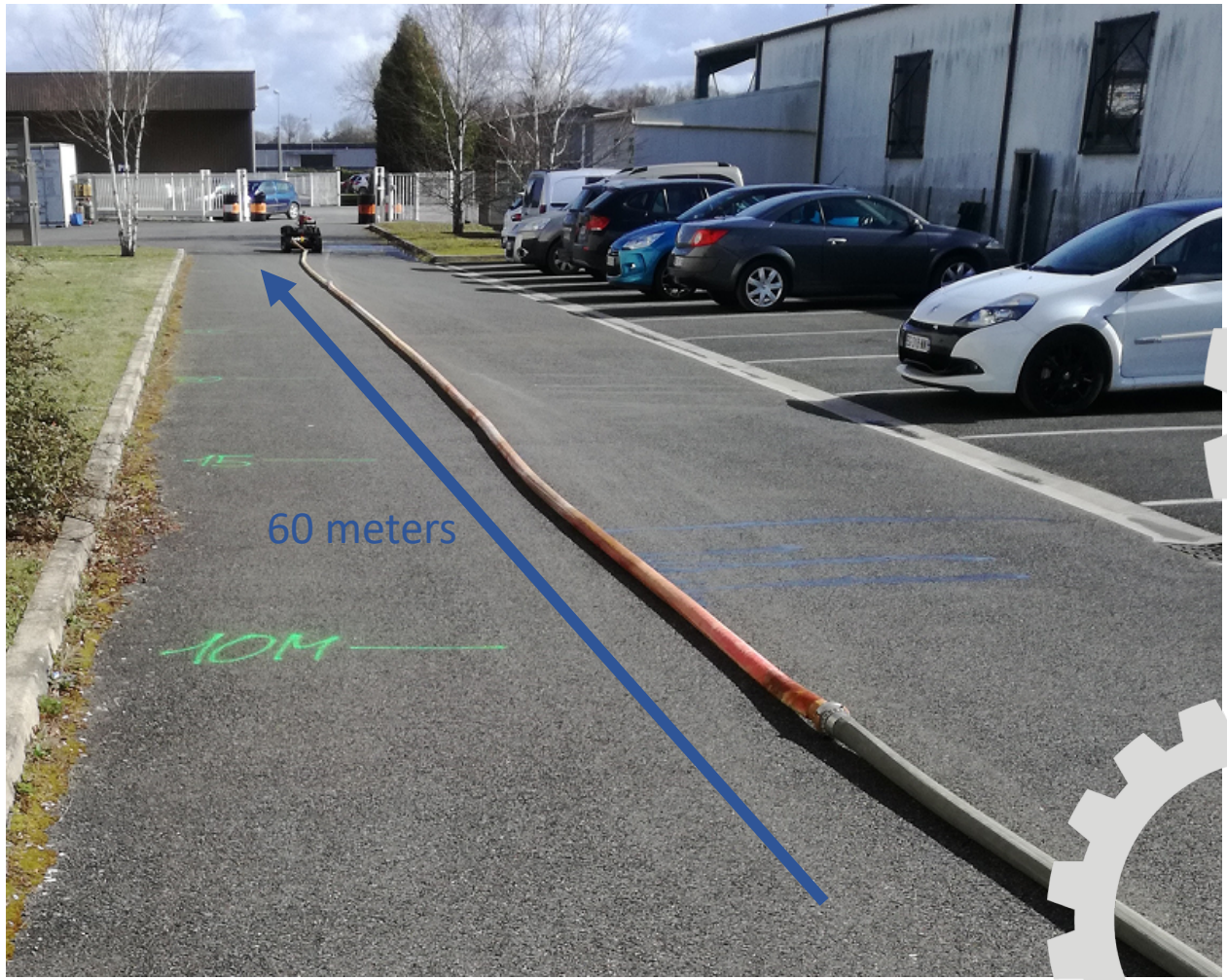

# 2) Characteristics



**Flowrate :**

**2 000 L/min**

**(7 bar in output)**

**One DN65 input**

| Loss of charge<br>Robot + monitor (DN65) | ≈ 1,5 Bar |
|---|---|

***Data for 2 000 L/min***

POK FIREFIGHTING EQUIPMENT

www.pok.fr

# 2) Characteristics



**Range :**

**60 mètres**

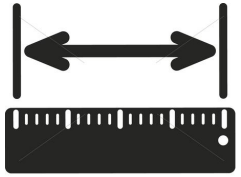

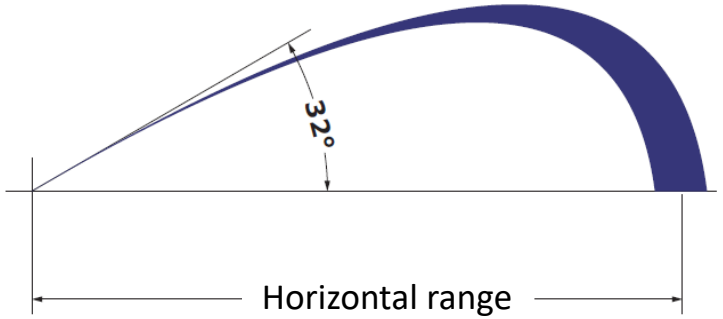

POK FIREFIGHTING EQUIPMENT
www.pok.fr

# 3) Operation of the Monitor



**Horizontal Movements :**

Right

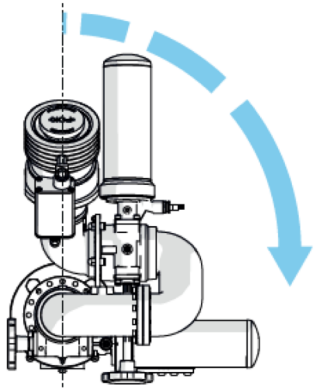

Left

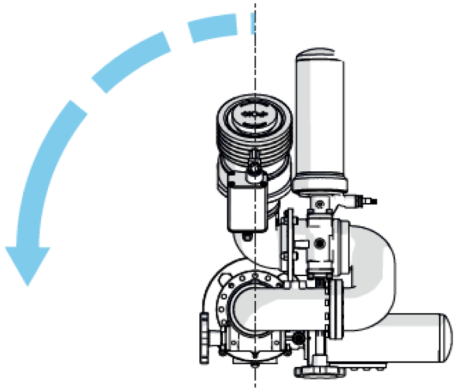

**Proportional Joystick**

# 3) Operation of the Monitor



**Vertical Movements:**

Downwards

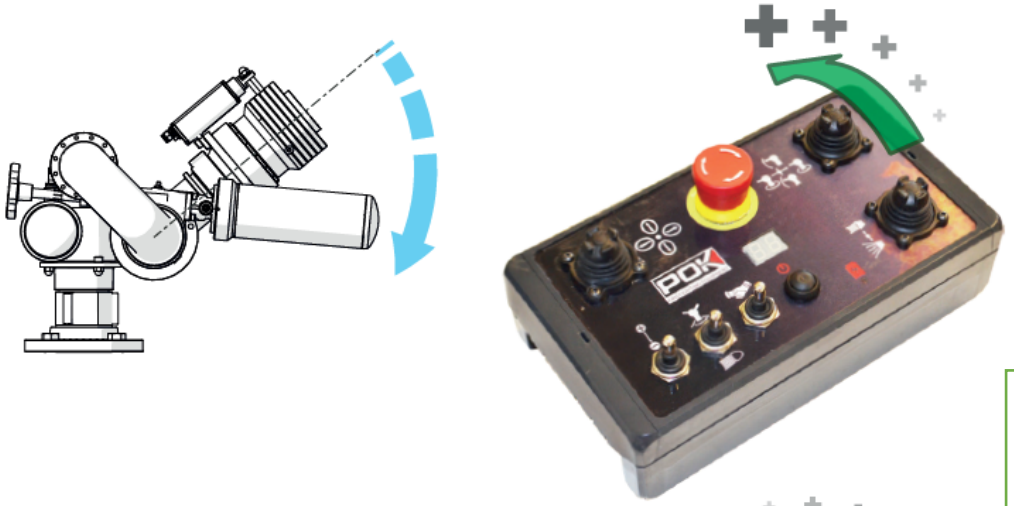

Upwards

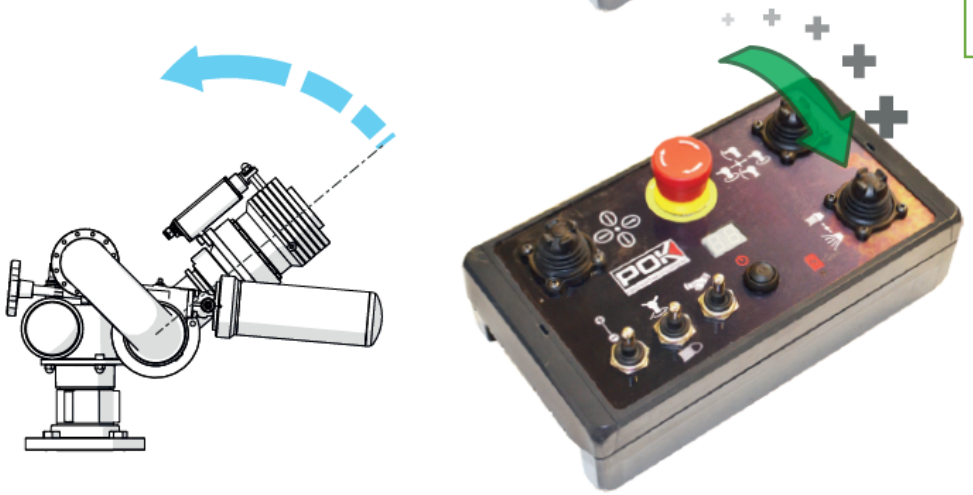

**Proportional Joystick**

POK FIREFIGHTING EQUIPMENT
www.pok.fr

# 3) Operation of the Monitor



**Nozzle Movements :**

Attack Stream
(Straight)

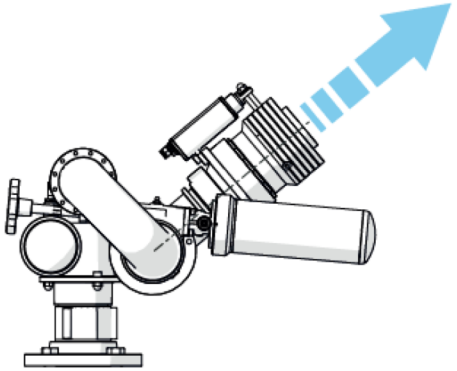

**Joystick**
**Digital output**

Protection stream
(Fog)

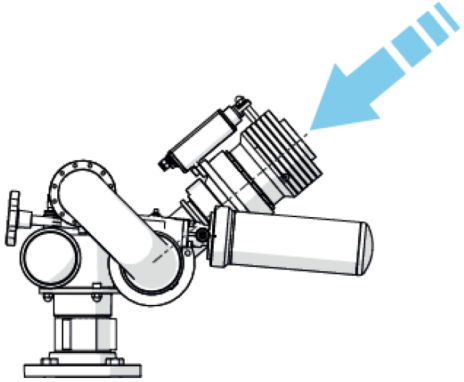

POK
FIREFIGHTING EQUIPMENT
www.pok.fr

# 4) Operation of the Robot



**Mouvement Robot 1/**

Move Foreward

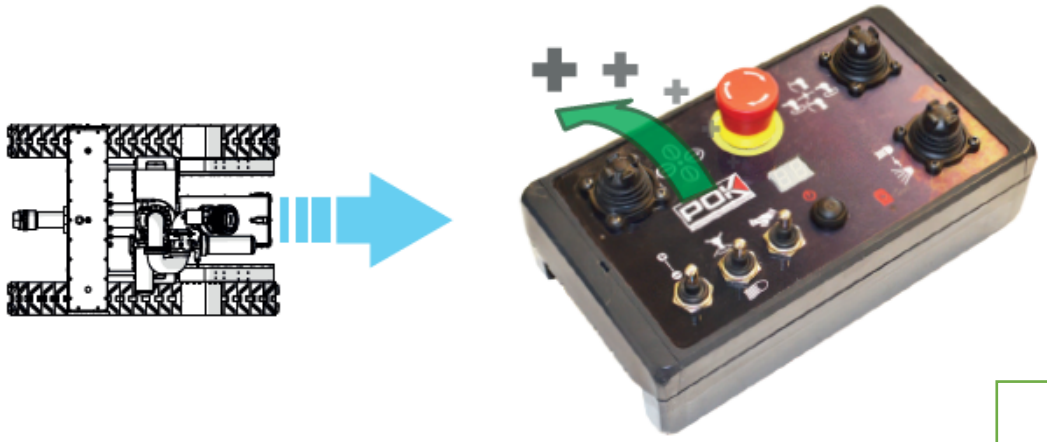

Move Backward

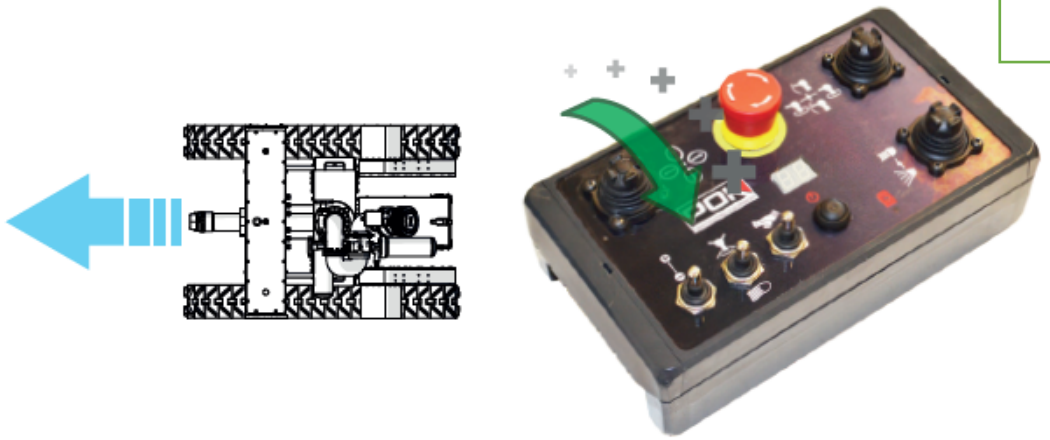

**Proportional Joystick**

# 4) Operation of the Robot

## Mouvement Robot 2/2:

To the Right

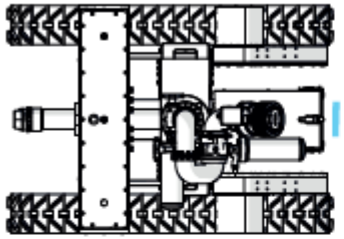

Can be combine with the forward or downward move

**Proporional Joystick**

To the Left

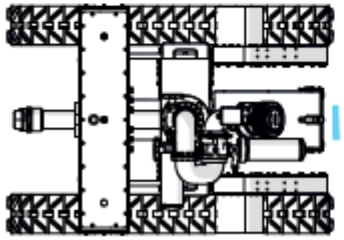

POK FIREFIGHTING EQUIPMENT
www.pok.fr

# Photos in situ



**In conditions 1/2:**

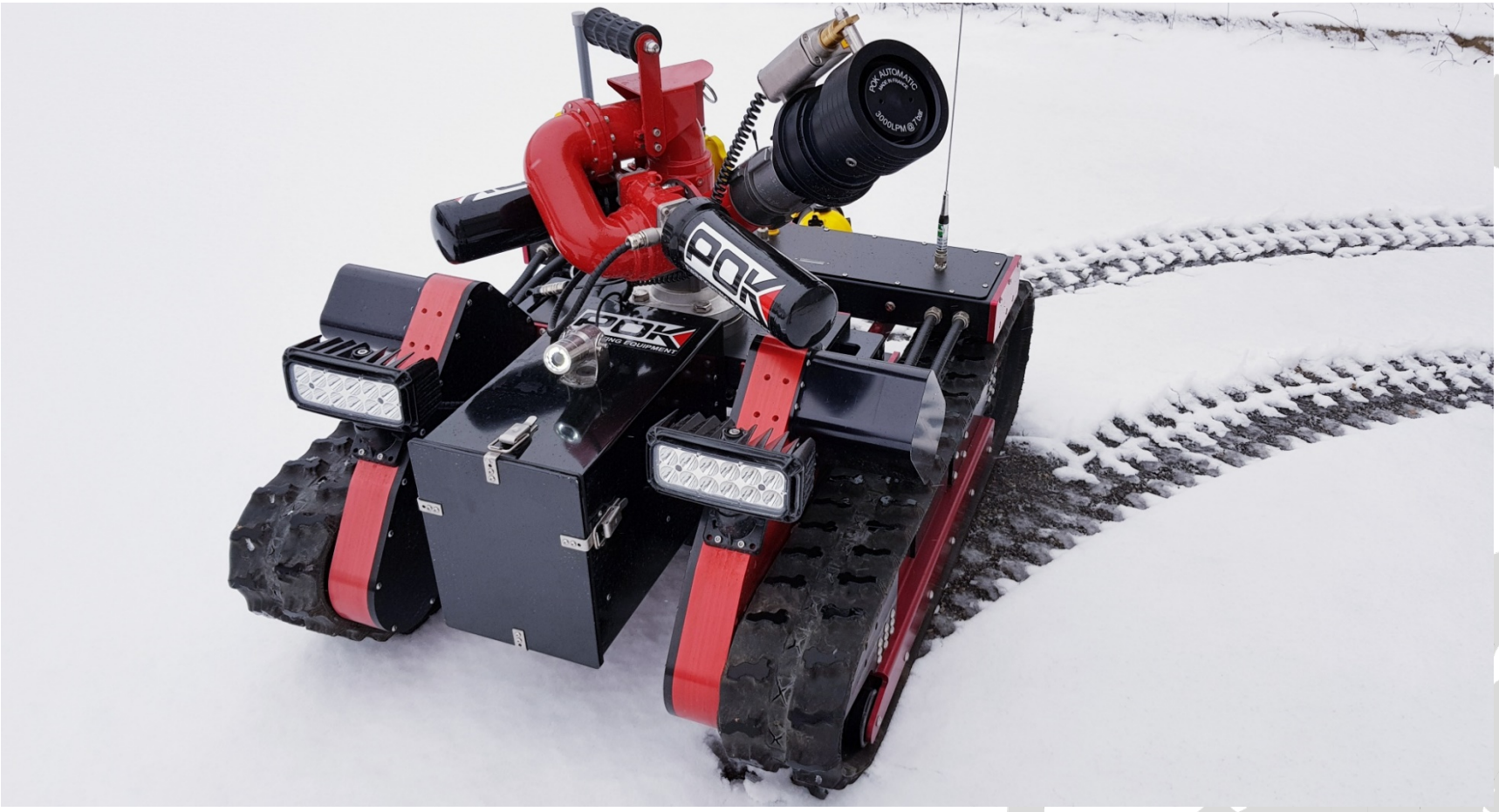


POK FIREFIGHTING EQUIPMENT
www.pok.fr

# 4) Photos in situ



**In conditions 2/2:**

POK FIREFIGHTING EQUIPMENT
www.pok.fr

# Remote Controlled Dpt. :

**Philippe Weber**
philippe.weber@pok-fire.com
Skype id : philippe.weber.pok
Cell phone: +33 626 343 878

**Cédric Bonaventure**
cedric.bonaventure@pok-fire.com
Skype id : cedric.bonaventure.pok
Cell phone: +33 668 200 345

**Mickaël Perrin**
Mickael.perrin@pok-fire.com
Skype id : mickael.perrin.pok
Cell phone: +33 310 591 183

**International Sales Dir.**
**Pascal Cambournac**
pascal.cambournac@pok.fr
Cell phone: +33 626 427 955

POK FIREFIGHTING EQUIPMENT
www.pok.fr

# REMOTE CONTROLED MONITOR

POK
FIREFIGHTING EQUIPMENT

www.pok.fr

POK SAS
18 Cours Antoine Lavoisier
10400 Nogent-sur-Seine
FRANCE

Tel: +33 (0) 3 25 39 84 78